KST501-N-60C

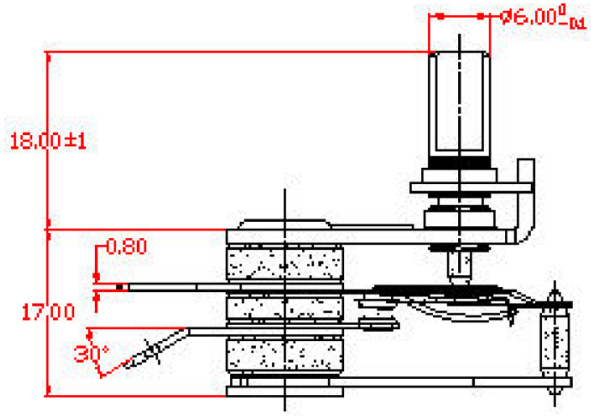

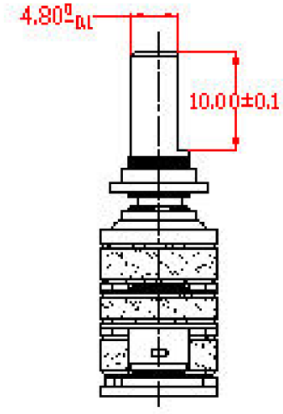

Notes:
1. 250V AC/16A
2. Rating: 1800v/0.5mA/Sec
3. High Temp:60±7℃
4. Turn-On Angle:160±15° @25℃
5. Operating Angle:270±5°
6. Custom Model:KST501-N-60C

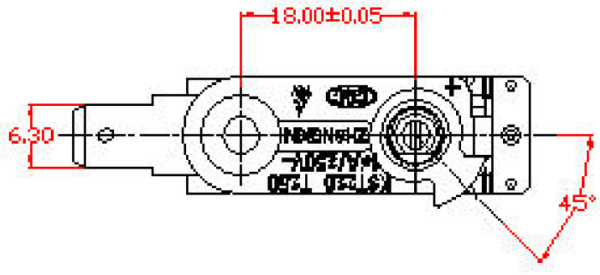

						A
		18.07.01				
						S B A 1:1

KST501-N-60C