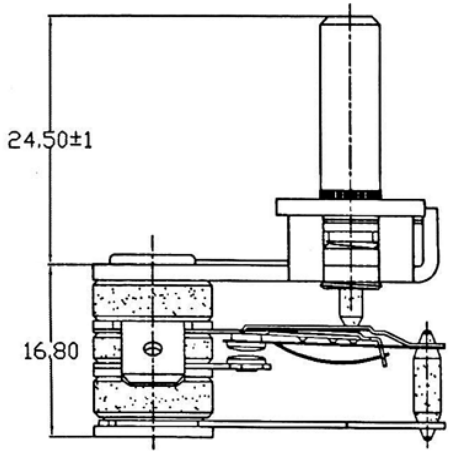

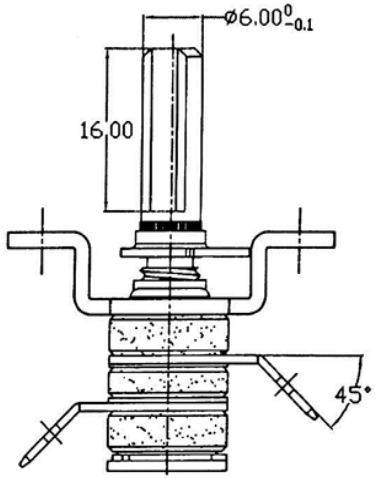

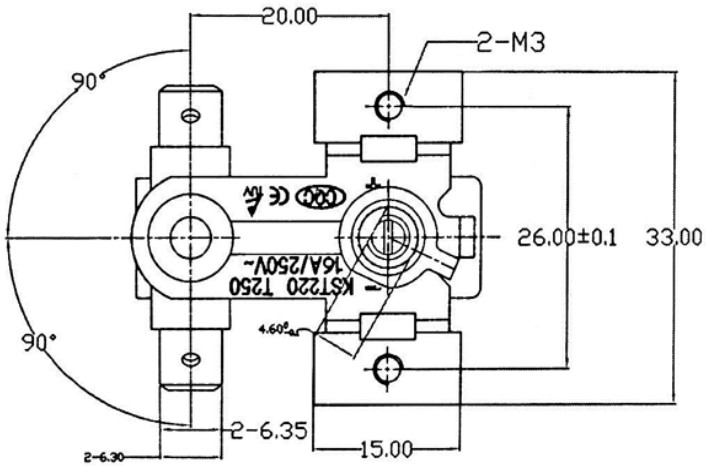

Specifications:
1. RATING:250V AC/10A
2. HI-POTEST:1800V/0.5mA/S
3. OPEN ON RISE HIGH TEMP:70±5℃
4. TURN ON ANGLE:170±20℃@25℃ROOM
5. ROTATION:305±5°
6. CUSTOMER MODEL:KST220-N-16126

			18.02.06				

Rev. A					KST220-N-16126
S	B	A		g	1:1