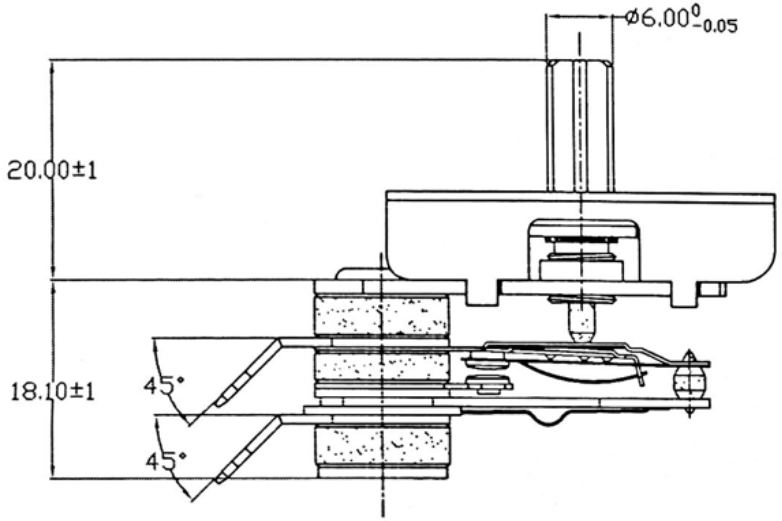


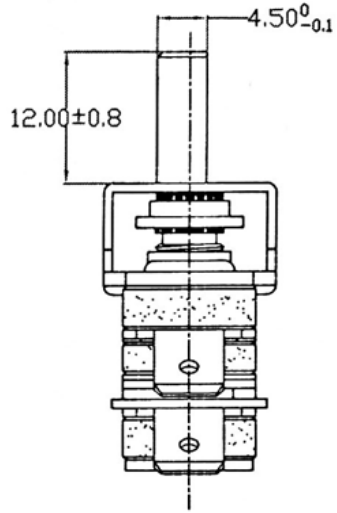


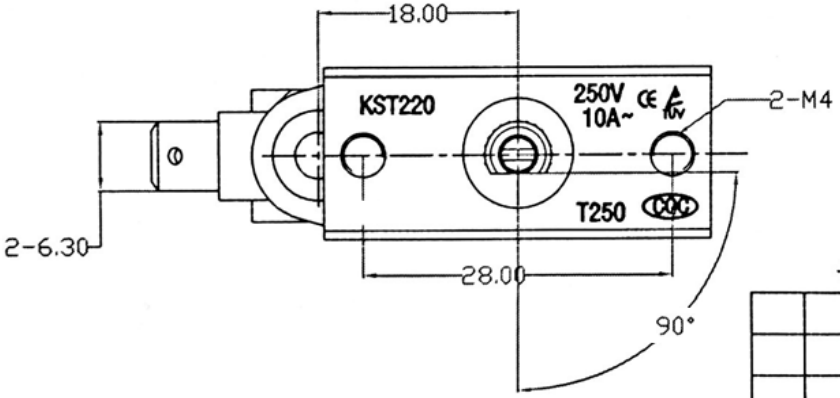


Specifications:
1.RATING:250V AC/10A
2.HI-POTEST:1800V/0.5mA/S
3.OPEN ON RISE HIGH TEMP:155±10℃
4.TURN ON ANGLE:90±10°@25℃ROOM
5.ROTATION:300±5°
6.CUSTOMER MODEL:KST220-1344

| | | | | | | |
|---|---|---|---|---|---|---|
| | | | | | | KST220-1344 |
| | | | 16. 08. 05 | | | |
| | | | | | S B A | 1:1 |