SPECIFICATION

SHEET FOR APPROVAL

CUSTOMER:

PRODUCTS: **DYNAMIC SPEAKER**

MODEL NUMBER: **DXI30N-A DX0046**

CUSTOMER PART NUMBER:

CONCISE DESCRIPTION:

"DXI30N-A D30 H 4.8 8 Ω"

1. SCOPE

This specification covers our product of dynamic speaker unit is for cordless phone use. .

2. MECHANICAL LAYOUT & DIMENSIONS

Shown in Fig.4

3. GENERAL REQUIREMENTS

3.1 OPERATING TEMPERATURE RANGE: -20℃ ~ +65℃

3.2 STANDARD TEST CONDITIONS:

Temperature:	17～25℃
Relative Humidity:	45%～80%(RH)
Air Pressure:	860～1060 hPa

3.3 JUDGEMENT CONDITIONS:

Temperature:	20±2℃
Relative Humidity:	60%～70%(RH)
Air Pressure:	860～1060 hPa

4. ELECTROACOUSTIC CHARACTERISTIC

4.1 SOUND PRESSURE LEVEL

82±3dB SPL（Average at 800Hz,1000Hz,1200Hz,1500Hz）

Measuring condition: 0.1W (Sine wave) 0.1m measured with baffler shown in Fig.1.

4.2 IMPEDANCE: 8±20%Ω (@2KHz 1V) without baffler.

4.3 MEASURING DIAGRAM: Shown in Fig.1.

4.4 TYPICAL FREQUENCY RESPONSE CURVE: Shown in Fig.2.

4.5 RATED POWER: 0.25W（White Noise for 48hours）.

MAX POWER: 0.5W.

4.6 RESONANCE FREQUENCY (F_0): 700±20%Hz @ 1V.

4.7 SOUND POWER: 0.25W (F0~10KHz) must be normal with sine wave (1.4Vrms).

■ FREQUENCY MEASURING CIRCUIT (SPEAKER MODE) (Fig.1)

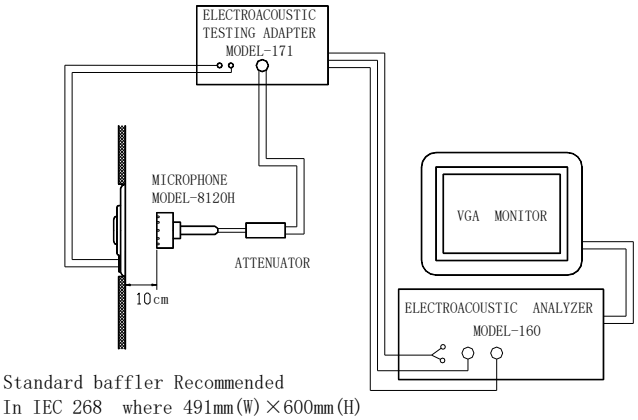

Fig.1 Illustration of measuring diagram (speaker mode)

■ TYPICAL FREQUENCY RESPONSE CURVE (SPEAKER MODE) (Fig.2)

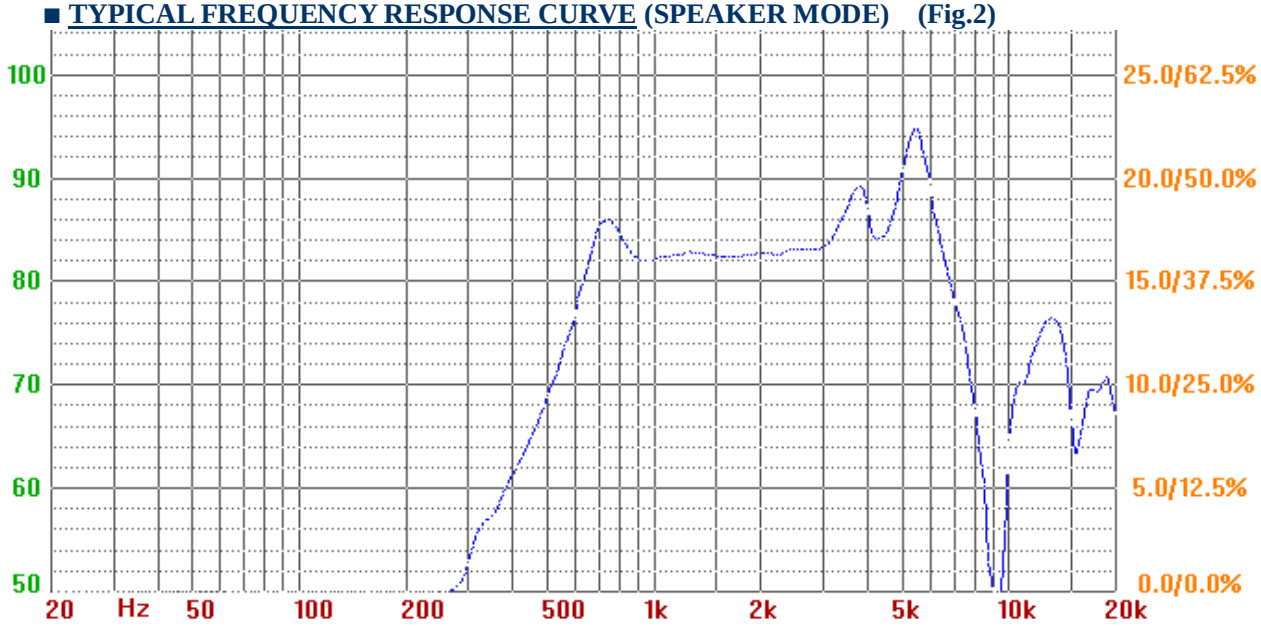

Fig.2 Typical frequency response curve (speaker mode)

6. RELIABILITY TESTS

The sound pressure as specified shall neither deviate more than ±3dB from the initial value, nor any significant damage after any of following testing.

6.1 HIGH TEMPERATURE TEST

High temperature: **+70±3°C**
Duration: **96 hours**

6.2 LOW TEMPERATURE TEST

Low temperature : **-30±3°C**
Duration: **96 hours**

6.3 HUMIDITY TEST

Temperature: **+40±2°C**
Relative humidity: **90～95%**
Duration: **96 hours**

6.4 TEMPERATURE CYCLE TEST (See in Fig.3)

Temperature: **-30°C ⟷ +70°C**
Duration: **1hr 0.5hr 1hr**
Temperature gradient: **1~3°C/min.**
Cycle: **6**

6.5 DROP TEST

Mounted with dummy set mass: **100 g**
Height: **75cm**
Cycle: **3times(corner, side, plane) onto the concrete board**

6.6 LOAD TEST

Speaker mode: White noise (EIA filter) for **48 hours @0.25W(1.4Vrms)** input power.

TEMP. CYCLE TEST (Fig.3)

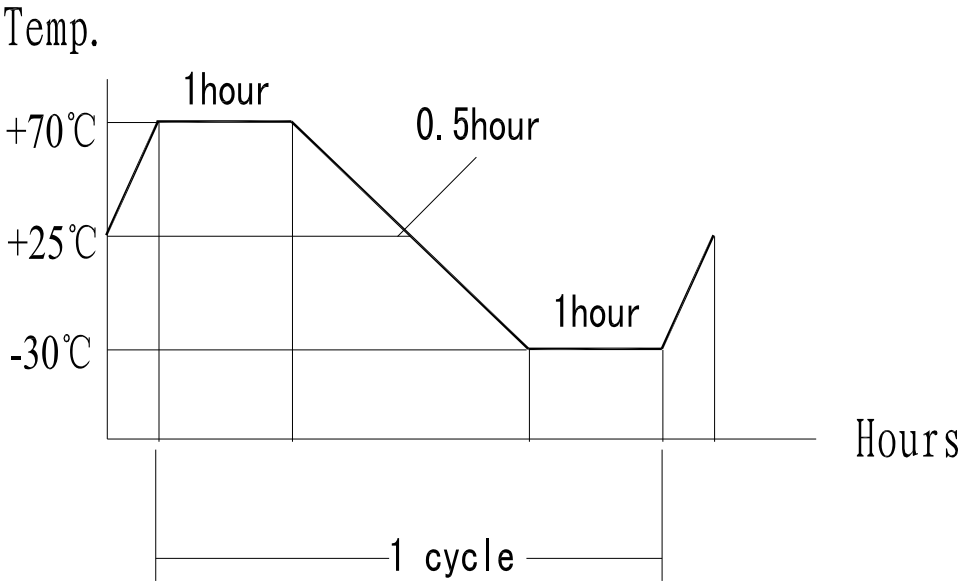

Fig.3 Illustration of temp. cycle test

6. DIMENSIONS (Fig.4)

Unless otherwise specified, tolerance: ±0.2 (unit: mm)

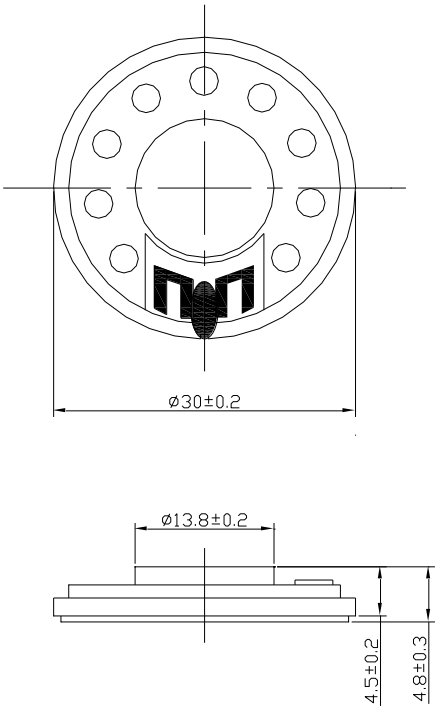

Fig.4 Outer dimension
