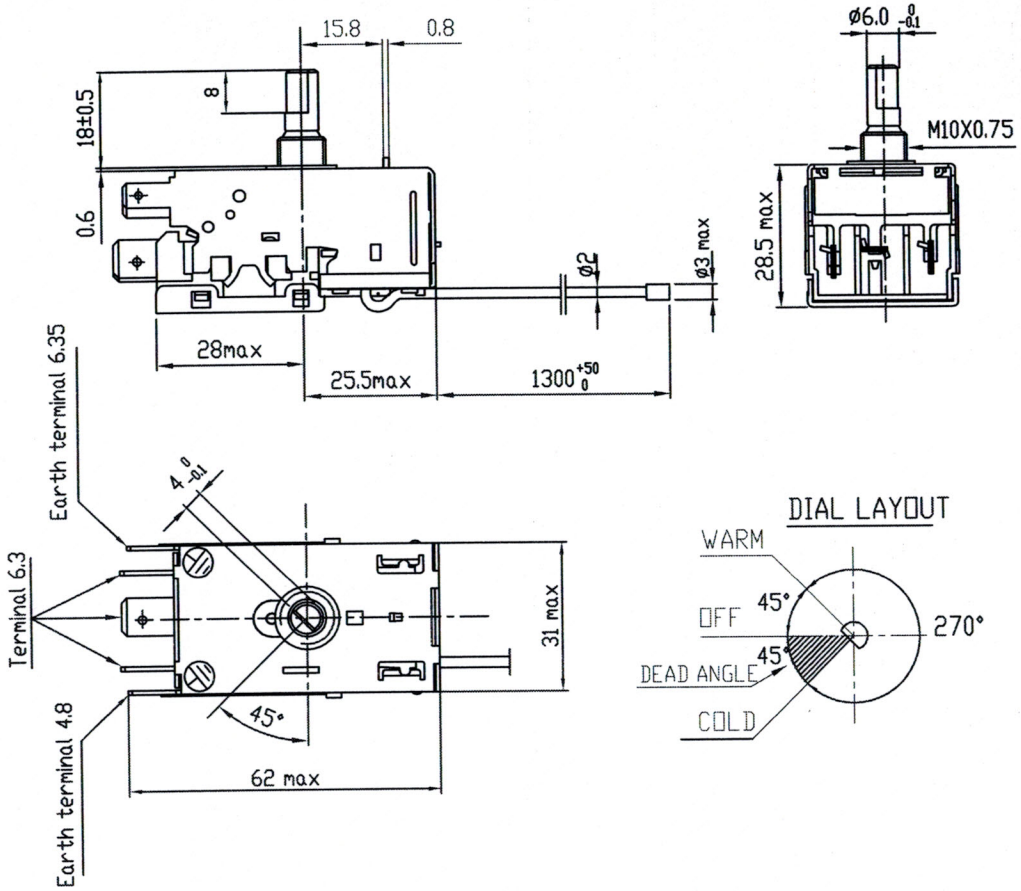

Operating Temperature (737mmHg)		Warm	Normal	Cold
	SIGNAL IN(°C)			
	CUT IN(°C)			
	CUT OUT(°C)			
	DIFF(°C)			
	The second testing temp is taken as an accurate value.			

Operating Temperature (760mmHg)		Warm	Normal	Cold
	SIGNAL IN(°C)	-11±2.0		
	CUT IN(°C)	-15±1.5		
	CUT OUT(°C)	-22±1.5		-33±2.5
	DIFF(°C)			
	The second testing temp is taken as an accurate value.			

Electrical Ratings	Rated Volts (V) / Rated Amperes (A)		Power Factor (Cosø)	AC 250	AC 120
				3-4/3-6	3-4/3-6
	Non-inductive Current		1	0.5--6	1--10
	Inductive Load	Full Load	0.75	0.5--6	1--10
		Locked Rotor	0.45	0.5--36	1--40

Insulation Resistance	More than 100MΩ with a DC500V megger
Dielectric Strength	AC 1500V for one minute
Kind of charge	Gas(R290)
Conditions of Operating Temp.	TS>TB TS: Temperature Around the Main Frame TB: Temperature around the Sensing Element
Response Characteristic of Sensing Element	Temp. change rate: ≤ 1°C/min
Max. Temperature	Around the Main Frame: 70°C Around the Sensing Element :80°C
Life of Contact	200,000 Cycles
Rotating Moment of Adjusting shaft	COLD —— WARMER 0.02-0.35N.m WARMER —— OFF less than 0.6N.m

Remarks :
1. The length of capillary immersed in the testing medium shall reach more than 150 mm.
2. The temperature characteristic is undera 760mmHg of atmosphere at 25°C
3. Thermostat shown in COLD position
4. The material requests according to the RoHS.

TYPICAL WIRING DIAGRAM

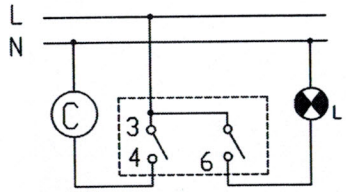

NOTE:
1. 3-4 Main switch:closes on temperature rise
2. 3-6 Signal switch : closes at temperature rise
3. C:compressor
4. L:Signal Lamp

Edition		Rejigger Number	SIGN	DATE
DESIGNED BY	S. B. Chen			18.3.13
CHECKED BY	W.G. Tan			18.3.15
INSPECTED BY	G. H. Chen			18.3.15
APPROVED BY				

Pressure Thermostat

WIRING DIAGRAM

Customer:VETRA

Customer code:

Tongbao code:KXF33F1

Design Mark	Number	Weight(kg)	Proportion
A			1:1

FOSHAN TONGBAO HUATONG CONTROLLER CO.,LTD.