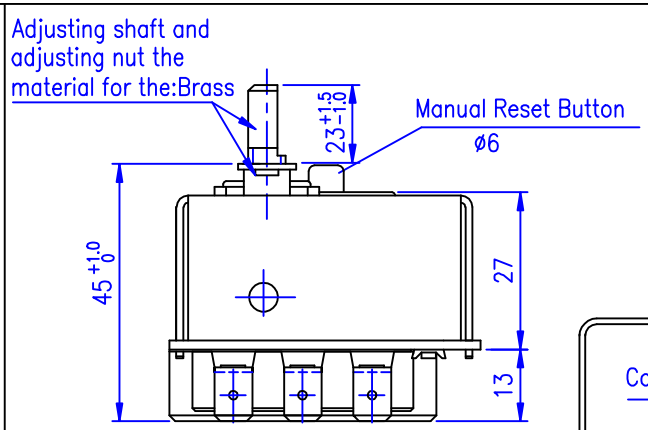

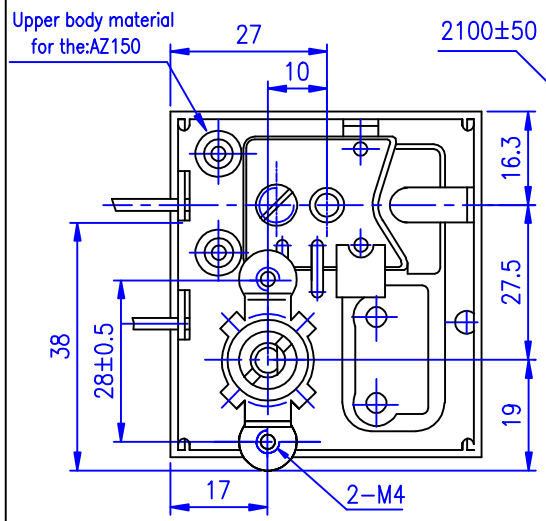

The scheme shows the OFF position

Electric diagram

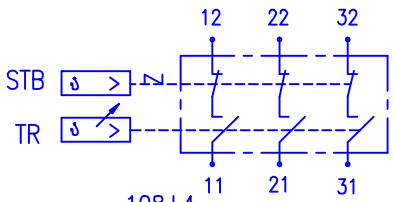

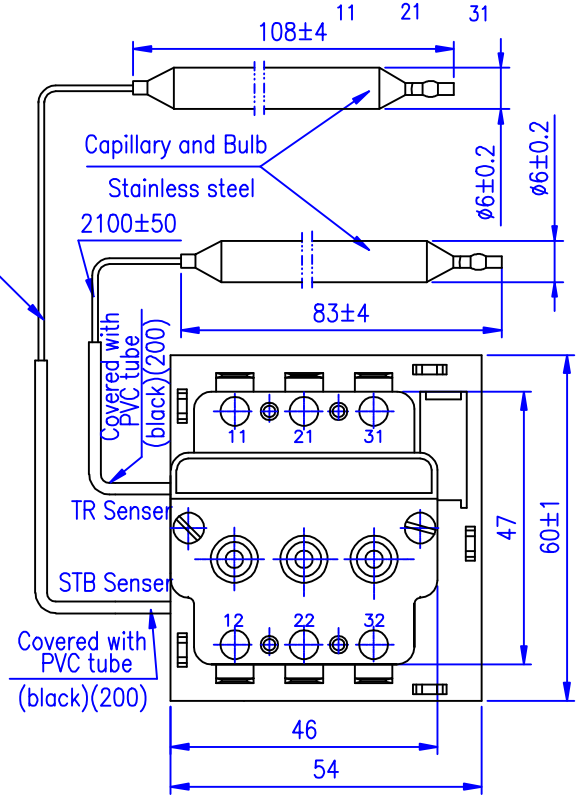

Technical Parameter

	TR	STB
H/OFF	105±6°C	125±6°C
DIFF	(8±4)K	
L/OFF	40±10°C	
Breaking capacity	23(3.5)A 400V~	
Minimum Current:	200mA	
Insulation Resistance:	>100M Ω	
Dielectric Strength:	AC 2000V 1min	
Temperature change speed:	<1.0°C/min	
Maximun temperature: Around the Switch Body	T80°C	
Maximun temperature: Around the Sensing Bulb	−20~200°C	−20~190°C
Rotating Torque of Adjustment Shaft:	<0.4Nm	
Life of Product:	100,000 Cycles (automatical)	1000 Cycles (mechanical)
	1000 Cycles (mechanical)	
Temperature modified value	0.33	0.29(K/K)

REMARK:
1.TR : Temperature Regulater STB : Safety Temperature Breaker
2.The operating temperature above is at 25°C ambient temperature (temperature around the switch body), If the ambient temperature changes , the operating temperature needs modified.
3.Submerged capillary length :50±30mm.
4.The permitted minimum semi−diameter of spiral capillary should be more than 5mm

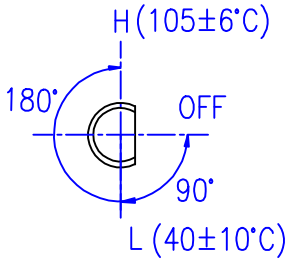

Rotating Angle

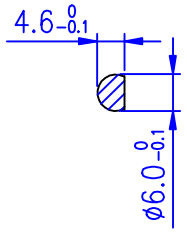

ReJigger Mark	Change content	Date
DESIGNED BY		
CHECKED BY		
TECHNOLOGY BY		
NORMALIZED BY		
APPROVED BY		

Liquid Expansion Type Thermostat

WIRING DIAGRAM

WYC125B−001

Design Mark	Number	Weight(kg)	Proportion
S			1:0.8

FOSHAN TONGBAO CO.,LTD