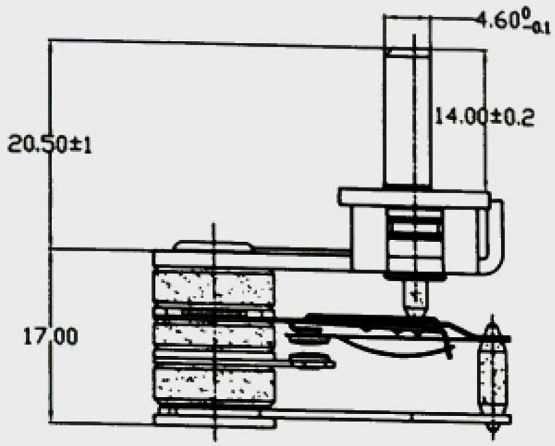

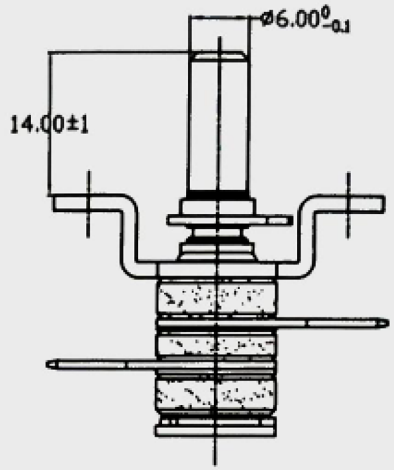

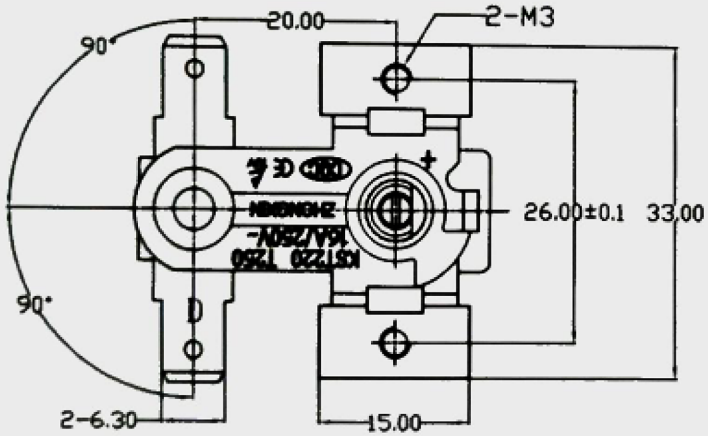

Notes:
1. 250V AC/16A
2. Rating: 1800v/0.5mA/Sec
3. High Temp:70±8℃
4. Turn-On Angle:90±20° @25℃
5. Operating Angle:270±5°
6. Custom Model:KST220-2-16A-1033D